Waikato Building Consents

Working Together

As Laid Drainage

Building Consent Number: 2016/33450 Date: 22 / 03 / 16 No. of pages: 1

Builder: Golden Homes

Owner: Francis Residence

Address: Lot 55 33 Sylvester Cres

Drain Layer Name: Drainage Systems (Please print clearly) Signature:

Registration Number: 17944 Business Name: Drainage Systems
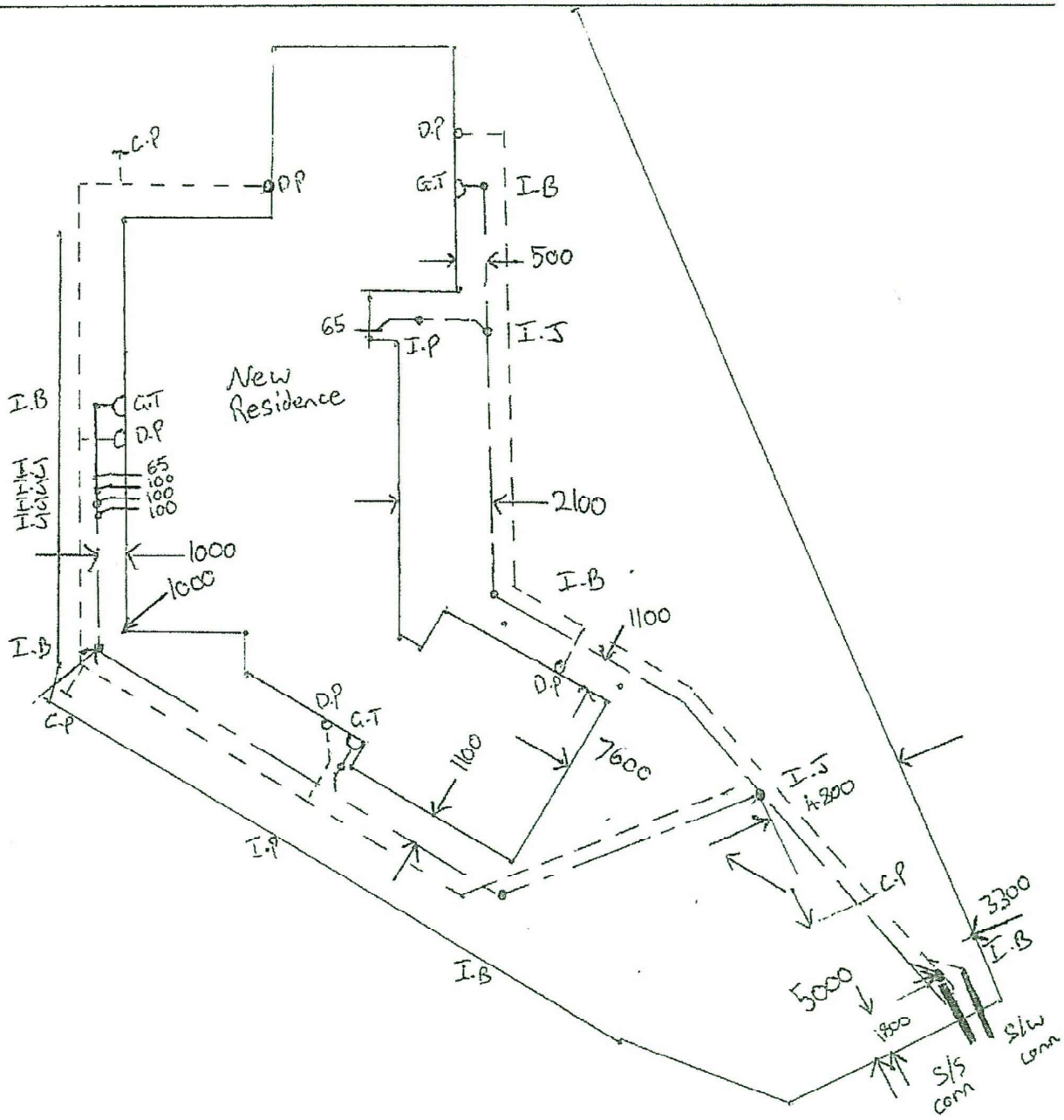
To Council: (Tick) ☐ Hauraki ☐ Matamata Piako ☐ Waitomo ☐ Otorohanga ☐ Waipa ☐ Waikato ☑ Hamilton